LAVATEC Equipment Specifications	LAVATEX	LX 332

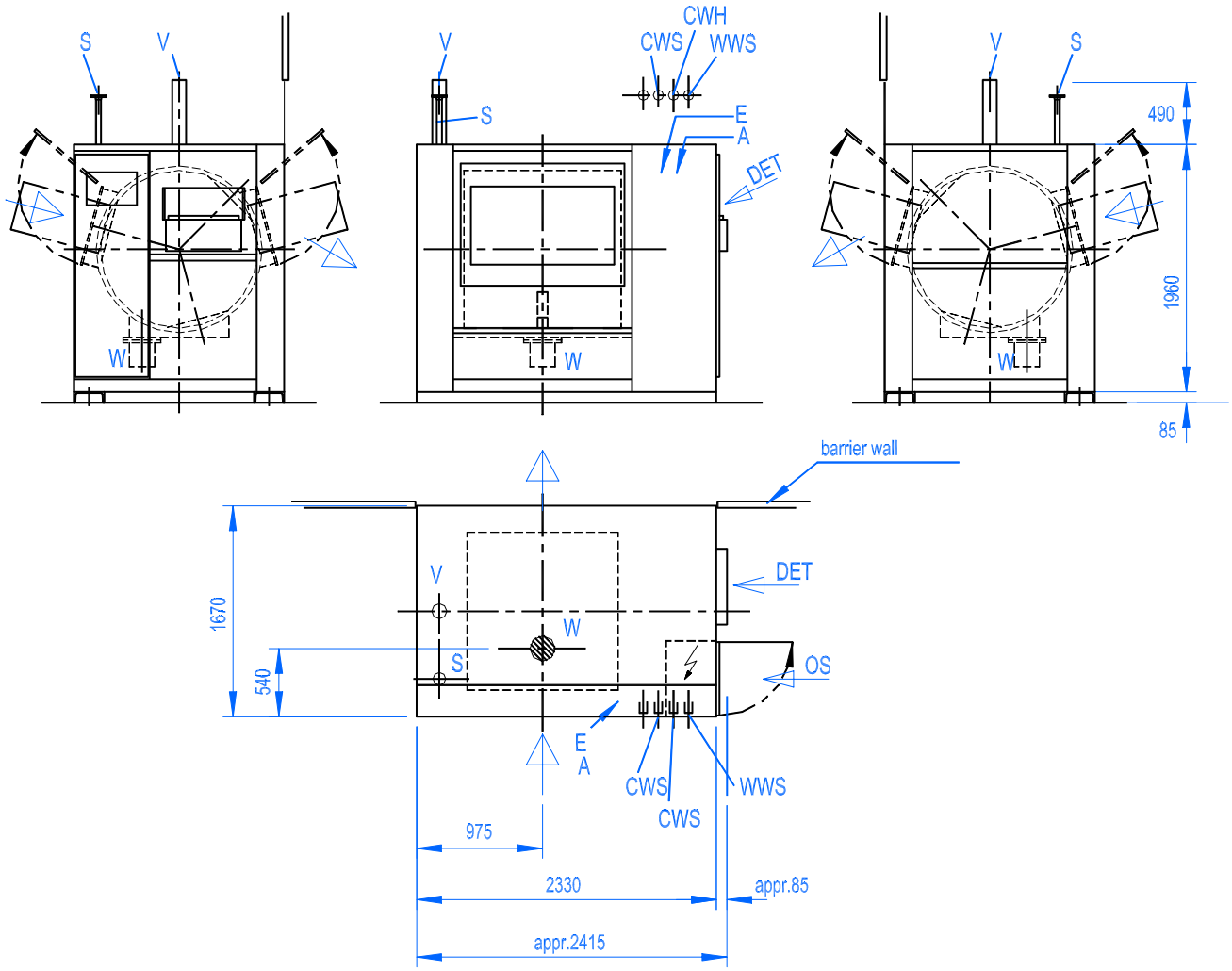

			Located above floor approx.			Located above floor approx.	
A	= Compressed Air	DN15	1000 mm	DET	= Detergent	1500 mm	Entrance Dimensions:
S	= Steam	DN40	2450 mm	E	= Electrical Supply	1000 mm	Height = 2600 mm
V	= Vent	DN115	2550 mm	OS	= Operation Side		Width = 1800 mm
W	= Waste Water	DN125	300 mm				
CWS	= Cold Water (soft)	DN32	2430 mm				Recommended minimum
WWS	= Warm Water (soft)	DN32	2430 mm				wall clearance = 1100 mm
CWH	= Cold Water (hard)	DN32	2430 mm				

Subject to alterations

Documentation	*Broadbent Laundry Systems* *Queen Street South, Huddersfield*	Edition 0004

Specifications Edition 0007

WASHER EXTRACTOR LX 332

CAPACITY:	at filling ratio 1:10 / 1:11 kg	147 / 134
TYPE:	washer extractor in hygienic version	x
INSTALLATION:	in barrier wall	x
LOADING:	manually, loading opening W x H	mm 980 x 400
UNLOADING:	manually, unloading opening W x H	mm 980 x 400
LOADING DOORS:	opening without tool, pneumatically locked, controlled by 2 safety limit switches	x
MATERIAL:	contact of linen and water with stainless steel only	x
DRUM:	diameter 1250 mm x depth 1200 mm, volume	dm³ 1470
DRUM PARTITION:	2 or 3 pockets	x
DRUM BEARING:	2 bearings, one on each side	x
DRUM ROTATION:	individually variable between	min^{-1} 10-750
DRIVE SYSTEM:	three-phase variable speed drive motor with frequency converter and separate brake	x
G - FACTOR:		395
TOTAL WEIGHT:	without recovery system kg 4000	
FOUNDATION:	suitable for operational weight of approx.	kg 5200
	no special foundation required	x
SUSPENSION:	outer drum supported by 8 pneumatic air cushions and 10 gas pressured shock absorbers to ensure a low vibration operation	x
UNBALANCE CONTROL SYSTEM:	with loosening function and automatic restart	x
BATH LEVEL:	automatic control of bath level depending on wash program	x
COOL DOWN:	pendulum rinsing for specification of cool down curve	x
OPTION:	water recycling by 2 or 3 additional water tanks on top of machine 1 tank heated, water saving up to approx.	% 40 / 60
HEATING:	direct heating by steam injection	max 10 bar
CHEMICAL SYSTEM:	device for manual chemical supply into 4 stainless steel containers with automatic water flush system	x
VALVES:	without water recovery: 3 valves water	DN 40
	1 valve direct heating	DN 25
	with water recovery: 2 valves main water	DN 40
	2 valves direct heating	DN 25
	1 maintenance unit for compressed air	DN 8
	1 drainage valves	DN 125
	1 valve for cool down	DN 15
PNEUMATIC:	control elements placed in separate pneumatic unit	x
COMPRESSED AIR:	supply / operating pressure	DN/bar 8/8
	suction capacity / charge	dm³ 165
ELECTRICAL SUPPLY:	3 / N AC, 50 Hz, 400 / 230 V	x
CONNECTED LOAD:	without / with recovery	kW 34,0 / 35,1
ELECTRIC CONTROL:	washer extractor processing control and frequency converter	x
	built in 99 wash programs	x
	all data of parameters as: time, level, dosage, temperature, rotation of drum, reversing, cool down, are shown on the display	x
	all functions can be controlled manually	x

x = included

Subject to alterations